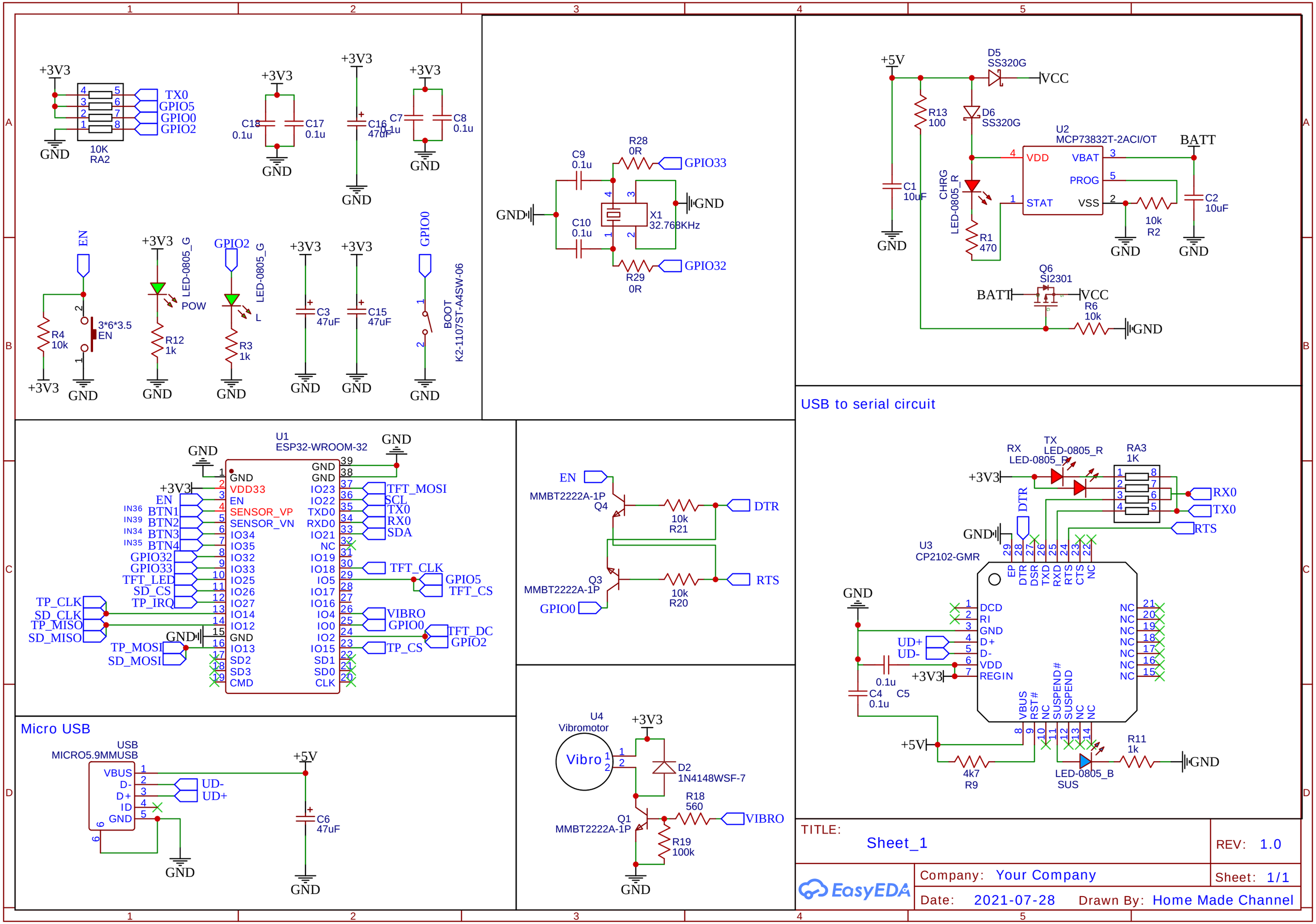
+3V3
TX0
GPIO5
GPIO0
GPIO2
10K
RA2
GND
C18
0.1u
C17
0.1u
C16
47uF
C7
0.1u
C8
0.1u
EN
3*6*3.5
EN
R4
10k
LED-0805_G
POW
R12
1k
GPIO2
LED-0805_G
L
R3
1k
C3
47uF
C15
47uF
GPIO0
BOOT
K2-1107ST-A4SW-06
C9
0.1u
C10
0.1u
R28
0R
R29
0R
GPIO33
GPIO32
X1
32.768KHz
+5V
D5
SS320G
VCC
R13
100
D6
SS320G
C1
10uF
CHRG
LED-0805_R
R1
470
U2
MCP73832T-2ACI/OT
VDD
VBAT
PROG
STAT
VSS
BATT
10k
R2
C2
10uF
Q6
SI2301
R6
10k
USB to serial circuit
U1
ESP32-WROOM-32
GND
VDD33
EN
SENSOR_VP
SENSOR_VN
IO34
IO35
IO32
IO33
IO25
IO26
IO27
IO14
IO12
IO13
SD2
SD3
CMD
IO23
IO22
TXD0
RXD0
IO21
NC
IO19
IO18
IO5
IO17
IO16
IO4
IO0
IO2
IO15
SD1
SD0
CLK
BTN1
BTN2
BTN3
BTN4
GPIO32
GPIO33
TFT_LED
SD_CS
TP_IRQ
TP_CLK
SD_CLK
TP_MISO
SD_MISO
TP_MOSI
SD_MOSI
TFT_MOSI
SCL
TX0
RX0
SDA
TFT_CLK
GPIO5
TFT_CS
VIBRO
GPIO0
TFT_DC
GPIO2
TP_CS
MMBT2222A-1P
Q4
Q3
10k
R21
R20
DTR
RTS
Micro USB
USB
MICRO5.9MMUSB
VBUS
D-
D+
ID
UD-
UD+
C6
47uF
U4
Vibromotor
Vibro
D2
1N4148WSF-7
Q1
R18
560
R19
100k
VIBRO
TX
LED-0805_R
RX
LED-0805_R
RA3
1K
U3
CP2102-GMR
EP
DTR
DSR
TXD
RXD
RTS
CTS
DCD
RI
REGIN
VBUS
RST#
SUSPEND#
SUSPEND
0.1u
C4
C5
4k7
R9
R11
1k
LED-0805_B
SUS
TITLE:
Sheet_1
REV: 1.0
Company: Your Company
Sheet: 1/1
Date: 2021-07-28
Drawn By: Home Made Channel
EasyEDA

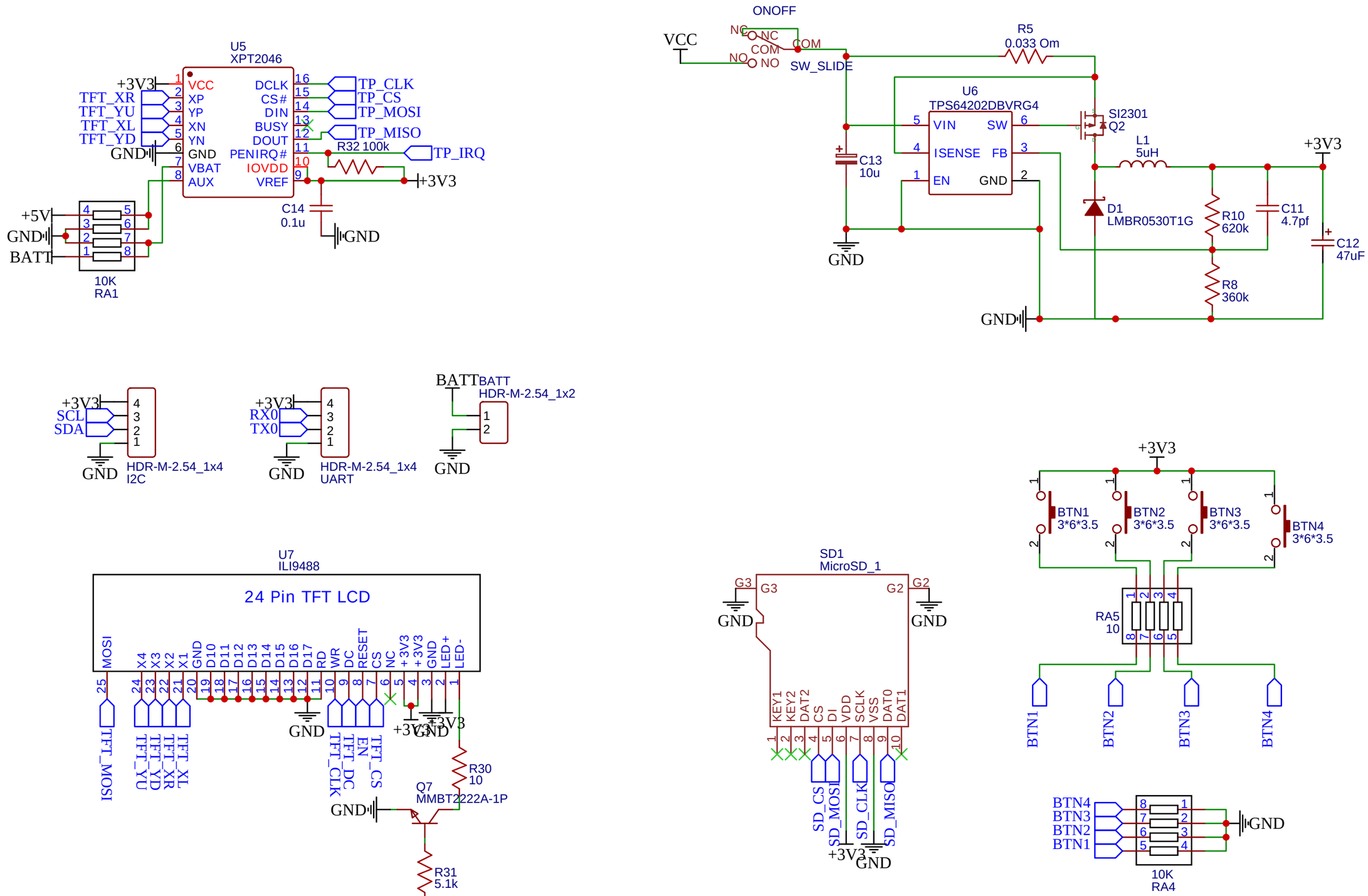


| | |
|---|---|
| TITLE: Sheet_1 | REV: 1.0 |
| Company: Your Company | Sheet: 1/1 |
| Date: 2021-08-01 | Drawn By: Home Made Channel |

EasyEDA